HiWatch Series

IPC-T120
2.0 MP CMOS Network Turret Camera

Key Features

- 1/2.8" progressive scan CMOS
- Up to 2.0 megapixel
- 2.8 mm/4 mm/6 mm fixed focal lens
- 10 m IR range
- Dual stream
- Digital Wide Dynamic Range
- 3D DNR (Digital Noise Reduction)
- PoE (Power over Ethernet) optional
- Mobile monitoring via mobile application

Specifications

Camera	
Image Sensor	1/2.8" Progressive Scan CMOS
Min. Illumination	0.01 Lux @(F1.2,AGC ON), 0 Lux with IR; 0.028 Lux @(F2.0,AGC ON), 0 Lux with IR
Shutter Speed	1/3 s to 1/100,000 s, support slow shutter
Lens	2.8 mm, horizontal field of view: 105.8° (4 mm: 83°, 6 mm: 55° optional)
Lens Mount	M12
Day &Night	IR cut filter with auto switch
3-Axis Adjustment	Pan: 0° to 360°, tilt: 0° to 75°, rotation: 0° to 360°
DNR (Digital Noise Reduction)	3D DNR
WDR (Wide Dynamic Range)	Digital WDR
Compression Standard	
Video Compression	Main stream: H.264+/H.264 Sub stream: H.264/MJPEG
H.264 Type	Baseline Profile/Main Profile
Video Bit Rate	32 Kbps to 8 Mbps
Image	
Max. Resolution	1920 × 1080
Main Stream Max. Frame Rate	50Hz: 25fps @(1920 × 1080, 1280 × 960, 1280 × 720) 60Hz: 30fps @(1920 × 1080, 1280 × 960, 1280 × 720)
Sub-stream Max. Frame Rate	50Hz: 25fps @(704 × 576, 640 × 480, 352 × 288, 320 × 240) 60Hz: 30fps @(704 × 480, 640 × 480, 352 × 240, 320 × 240)
Image Settings	Brightness, saturation, contrast, sharpness are adjustable via web browser or client software
Day/Night Switch	Support auto, scheduled
Others	Mirror, BLC (area configurable), region of interest (support 1 fixed region)
Network	
Detections	Motion Detection
Alarms	Video tampering, network disconnected, IP address conflicted
Protocols	TCP/IP, ICMP, HTTP, HTTPS, FTP, DHCP, DNS, DDNS, RTP, RTSP, RTCP, NTP, UPnP, SMTP, IGMP, 802.1X, QoS, IPv6, Bonjour
Standard	ONVIF (PROFILE S, PROFILE G), CGI, ISAPI
General Function	Anti-flicker, heartbeat, mirror, password protection, privacy mask, watermark, IP address filter
Interface	
Communication Interface	1 RJ45 10M/100M self-adaptive Ethernet port
General	
Operating Conditions	-10 °C to 40 °C (-14 °F to 104 °F), Humidity 95% or less (non-condensing)
Power Supply	12 VDC ± 25%, PoE (802.3af)
Power Consumption	12 VDC, 0.38 A, Max. 4.5 W PoE (802.3af, 37 V to 57 V), 0.1 A to 0.16 A, Max. 6 W
IR Range	10 meters
Dimensions	Ø 110 mm × 92.1 mm (Ø 4.33" × 3.19")
Weight	190 g (0.4 lb.)

Available Models

IPC-T120

Dimension

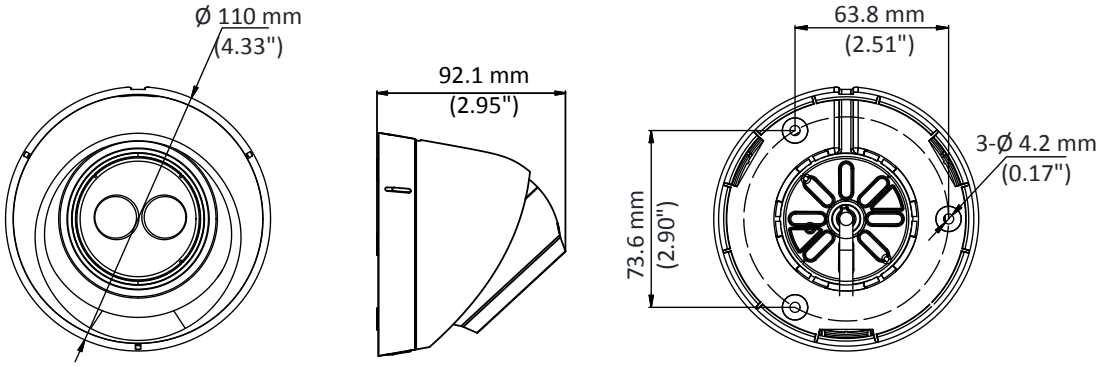

Accessory

DS-1272ZJ-110-TRS
Wall Mounting Bracket

DS-1275ZJ
Vertical Pole Mounting Bracket

DS-1280ZJ-XS
Inclined Base Mounting Bracket

DS-1276ZJ
Corner Mounting Bracket

DS-1281ZJ-S
Inclined Base Mounting Bracket

Hikvision UK & Ireland
4 The Square, Stockley Park,
Uxbridge, UB11 1ET
Tel: 01628 902140
sales.uk@hikvision.com
support.uk@hikvision.com