MOTION SENSOR PIR LIGHT SWITCH

Cat No. ZV810

TIME GUARD LIMITED

INSTALLATION & OPERATING INSTRUCTIONS

ZV810 Motion Sensor PIR Light Switch

Please read the instructions before using the product and retain for future use.

Content

Pattern			
Item	Light Switch	Instructions	Silver Label
Quantity	1	1	1

Coverage

The ZV810 can be installed at various heights from 0.8M to 1.2M to detect a zone up to 8M in range over a 180º angle. (See Fig .1)

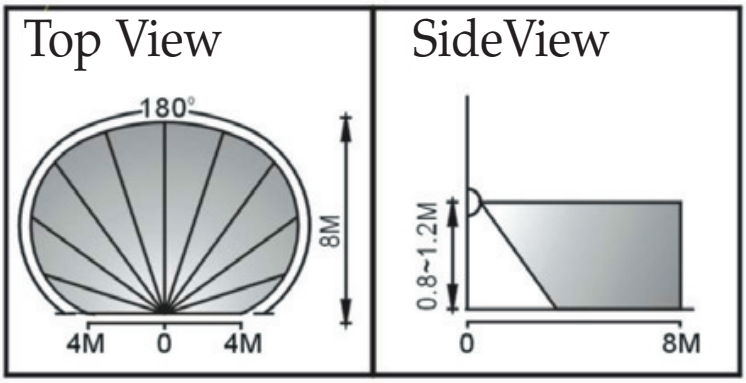

Fig. 1

Installation and Wiring

This product must be wired in accordance with the IEE Wiring Regulations. If you have any doubt about your ability to install this product consult a competent electrician. Switch off the power supply before installation and wiring.

A. Select a location

- For indoor use only ie: hallways, dining-room, basement, utility rooms and garages, etc. To replace existing one way or two way light switches.
- Since the ZV810 is sensitive to temperature changes. Avoid mounting directly above heat sources or exposed to direct sunlight.
- Avoid mounting the motion sensor switch where it can come into contact with water or rain.
- For best results mount the sensor switch to detect objects moving across it. (See Fig.2)

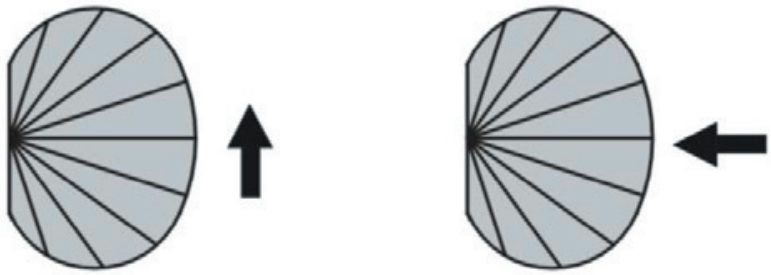

More Sensitive Less Sensitive Fig. 2

To avoid nuisance triggering

Your sensor switch may be activated by large animals, lights, reflective surfaces, heat sources or movements of objects.

The following guidelines will help you to avoid nuisance triggering:

- Do not aim the sensor towards any light sources.
- Avoid mounting the sensor near heat sources, such as heating vents, air conditioners, dryer vents or lights.
- Avoid directing the sensor toward areas or whose surfaces are highly reflective or are subject to rapid temperature change, such as pools.

B. Installation procedure

1. Ensure the power supply is switched off.
2. Open the front cover, to reveal the fixing screws (See Fig.3)
3. Loosen the screw and take apart the inner frame.
4. Refer to wiring diagrams, for wiring instructions.
5. Fix the motion sensor wall switch to the wall box with screws supplied.

6. Adjust the "TIME ", "METER" and " LUX " knobs for "Walk Test " over the desired detection zone. (See Fig.4)
7. Screw the inner frame in place and replace the lifting-front cover.

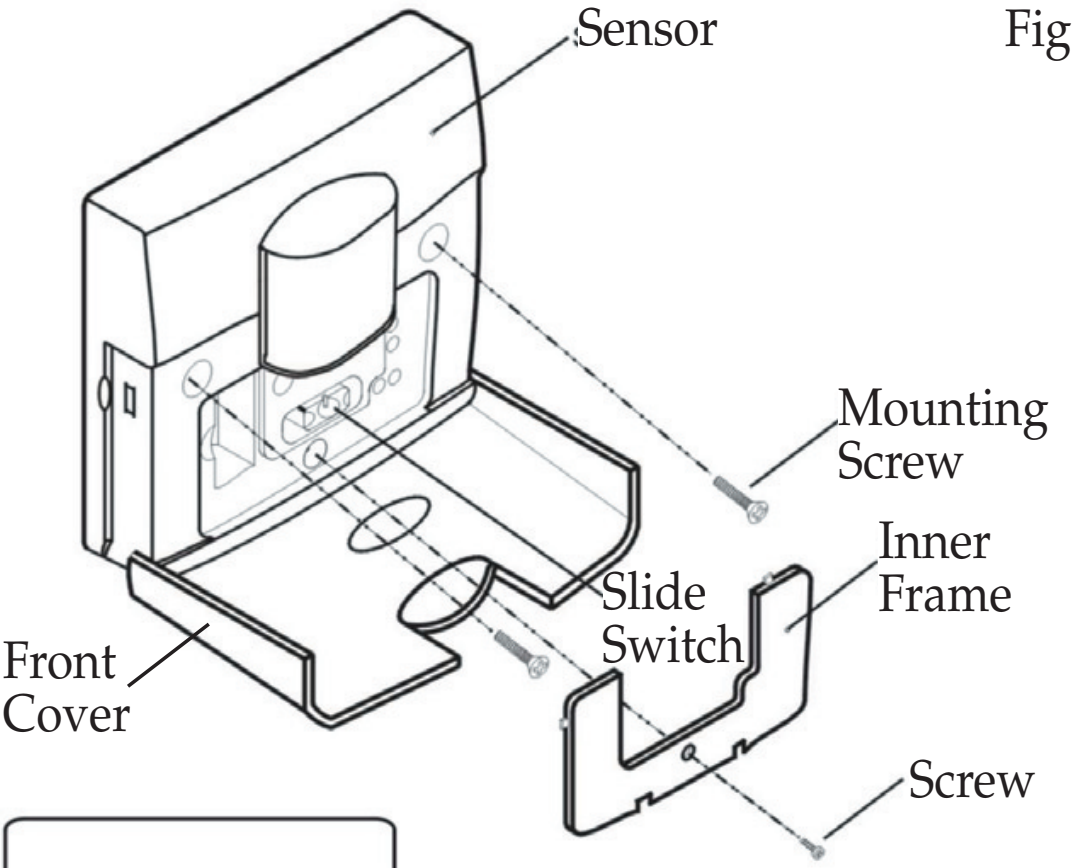

Fig. 3

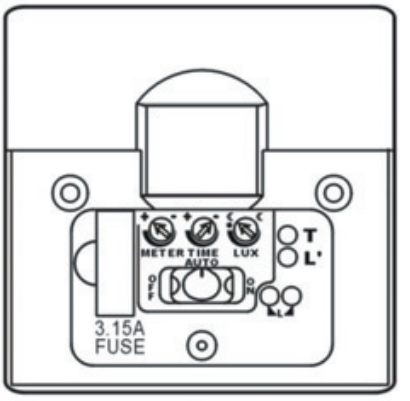

Fig. 4

C. Wiring Diagrams

1. To replace a one way switch. (See Fig.5)

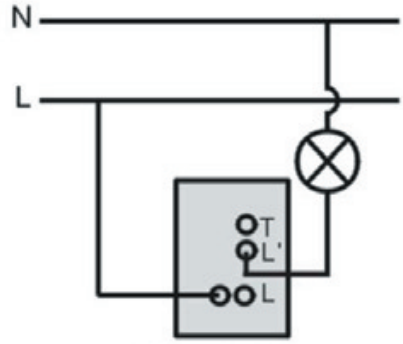

Fig. 5

- Wire dimension:
  Min. 0.5mm²
  Max. 2.0mm²

2. To replace a 2 way switch in a two way circuit. (such as stairs), (See Fig. 6)

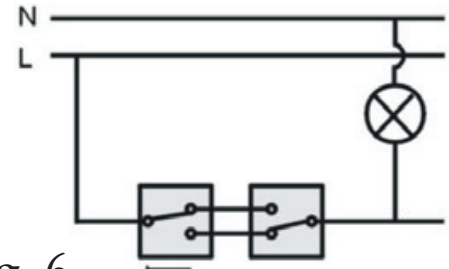

Fig. 6

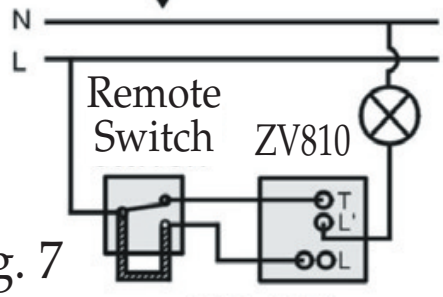

Fig. 7

- To replace a 2 way switch please refer to Fig. 7 for wire connection and add a link to the remote switch.
- When the Remote Switch is actuated, lights will remain on for the pre-set period.

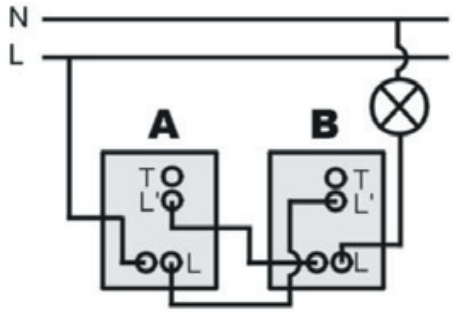

Fig. 8 ZV810 ZV810

3. To replace both 2 way switches in a two way circuit. (See Fig. 8)

Walk Test and Adjustment

A. Walk Test

1. After the main part of the motion sensor switch has been fitted to the wall box turn the power on to warm up sensor for at least 3 minutes to stabilize the sensor for normal operation before carrying out the "Walk Test".
2. Switch the sensor switch to the middle position for "AUTO" function. (See Fig. 11)
3. Start from outside the pattern and walk across it until the lights come on. (See Fig. 9)
4. Adjust the sensor "METER" knob as necessary to improve coverage until it meets users preference. (See Fig.11)

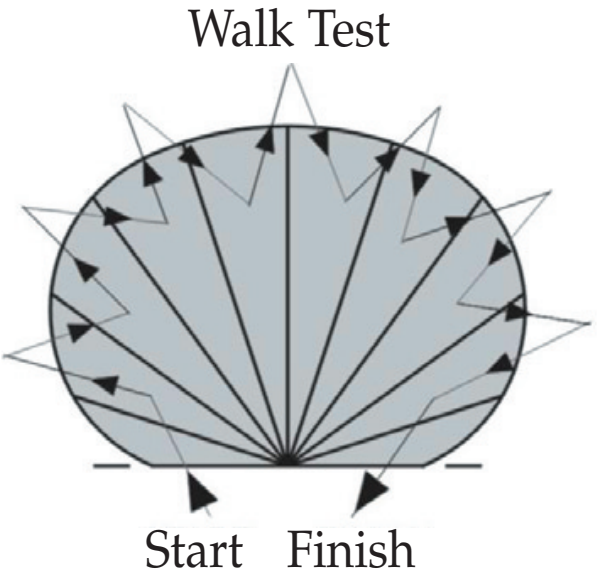

Fig. 9

5. To reduce the detection area, user can put on the silver label which is supplied with this instruction manual to cover the lens. (See Fig.10)

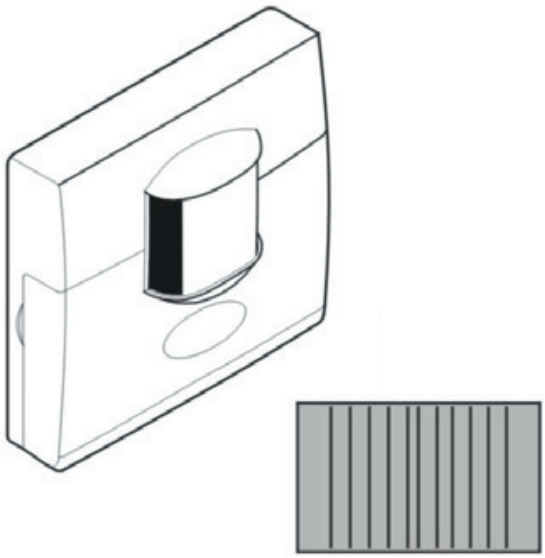

Fig. 10 Silver Label

B. Adjustment the "TIME", "LUX", and "METER" knobs.
(See Fig. 11)

1. Adjust the "TIME" control to set the ON time from about 6 seconds to the maximum 12 minutes. This period starts after body movement within the detection area is sensed.

2. Adjust the "LUX" to set the light level required for operation to start at the required light level.

3. Adjust the "METER" to set the detection distance up to about 8M.

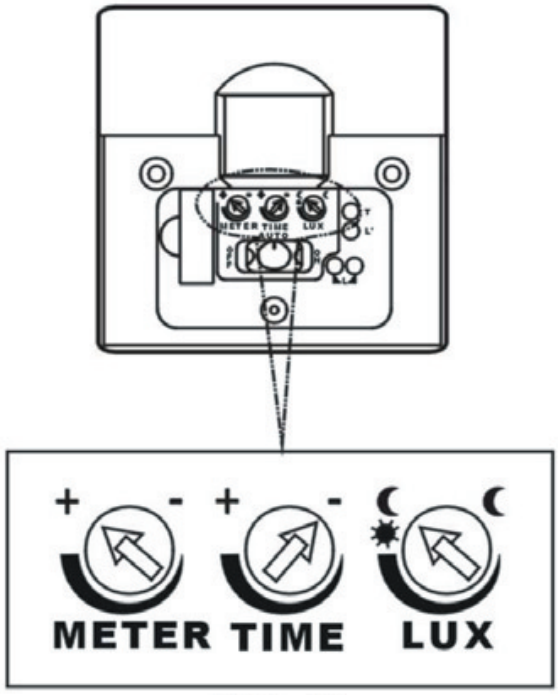

Fig. 11

Operation

A. Functions of Slide Manual Switch

After fitting the unit use the slide switch to set the "ON", "AUTO" or "OFF" functions. (See Fig. 11)

1.ON - lights “ON” manually.

Note: Set the switch in "OFF" position when replacing lights or fuses.

2.OFF - lights “OFF” manually.

3.AUTO - lights “ON” or “OFF” automatically according to the “METER”, “TIME” and “LUX”, control settings.

B. Operations in Different Wiring Conditions

1. When one or two sensor switches are used in a circuit. Sensor switch A should be set to the "AUTO" position.

2. When the sensor switch is in a two way circuit (See Fig. 7), the remote switch acts as a momentary switch. It can only trigger the sensor switch to turn the lights when the slide switch is set to the "AUTO" position. Thus, the two-way circuit will be controlled by the sensor switch.

3. When two sensor switches are used in a two way circuit (See Fig. 8) the operation will be as follows:-

A Sensor Slide Switch Position	B Sensor Switch Slide Switch Position	Light Controlled Status
ON	ON	ON
OFF	ON	ON
OFF	OFF	OFF
AUTO	AUTO	AUTO
AUTO	ON	ON
AUTO	OFF	AUTO

Note: Do not use with fluorescent and PL lamps that have conventional ballast (iron ballast). This will damage the starter and cause the ZV810 to retrigger.

Troubleshooting

Each sensor switch has undergone rigorous testing and quality control, malfunctions are mostly due to incorrect installation or exposure to heat souces.

Lights Do Not Turn On

1. Turn off power for at least 5 seconds, then on again.

2. Check that lights and fittings work properly. Compare wiring to the wiring diagram. Check that power is on.
3. Check that the slide switch is not in the "OFF " position.
4. Check the fuse.

Lights Come On And Off Quickly

1. Heat from lights will cause unsteady sensor performance.
2. Make sure lights are not reflecting back into the sensor. Check for white or reflective surfaces in the protection pattern. If so aim sensor and lights in a different direction.
3. Note that the sensor is more sensitive in winter since infrared energy is easier for the sensor to detect in cold temperature. Turn "METER" knob closer to " - ".

Lights Do Not Turn Off

1. Check that the Time control knob is set to minimum.
2. Check that the slide switch is in the "ON" position.
3. Keep out of the detection area to avoid activating.

4. Make sure the unit is not mounted on an unstable object which is warm. Make sure the unit is firmly mounted.
5. Make sure the unit is not aimed at something that would cause a temperature change such as air conditioners or heating vents.
6. Turn power off for more than 5 seconds, then turn on again to resume automatic operation.
7. Make sure line voltage is stable.

Note: Keep the lens area clean and free of obstructions. Do not attempt to open or repair the unit.

Do not use with dimmer or any other switch containing electronic circuit.

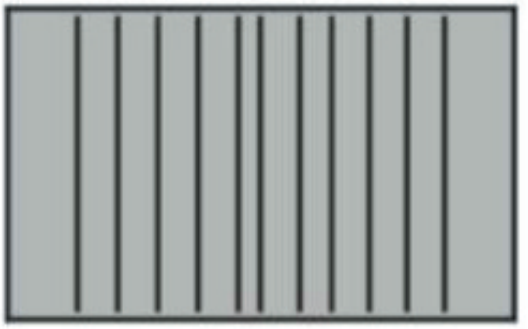

This is the silver label which can be used to cover the lens as (Fig.10) shown.

Specifications

Supply Voltage:	230VAC 50Hz.
Permissible Loads:	40-500W for incandescent light. 40-150W for low voltage halogen light. 18-150W for fluorescent light with electronic ballast. 15-150W for electronic PL lamp (Philips, Osram only).
Light ON Time:	Adjustable from about 6 seconds to 12 minutes.
Lux:	Fully adjustable light level sensitivity for sensor to be activated at the desired brightness in daytime.
Detection Range:	Adjustable up to 8 meters(20ºC).
Detection Angle:	Up to 180º (20ºC).
Fuse Protection:	3.15A, 5 x 20mm changeable
Manual Switch:	OFF /AUTO / ON
Operating Temperature:	-10ºC ~ +45 ºC
Environmental Protection:	IP30.

3 Year Guarantee

In the unlikely event of this product becoming faulty due to defective material or manufacture within 3 years of the date of purchase, please return it to your supplier in the first year with proof of purchase and it will be replaced free of charge.
For the second and third years or any difficulty in the first year telephone the helpline on **020 8450 0515.**

HELPLINE
020-8450-0515

TIMEGUARD
LIMITED

For a product brochure please contact:

Timeguard Ltd.
Victory Park, 400 Edgware Road,
London NW2 6ND
020-8452-1112
or email csc@timeguard.com