8X.7XX touch screen programming thermostat

Weekly circulation, it is possible to set 6 periods called events each day with different temperatures, also you can select "manual mode" or "comfort mode" according to your individual requirements. The thermostat is recommended for the control of electric heating devices or on/off valve actuator used in water-based heating systems.

Selection Table :

Model	Current	Application
8X.713	3A	For control of electric actuator or electrothermal actuator
8X.723	3A	For control of electric actuator or electrothermal actuator
8X.716	16A	For control of heating cable or other heating equipments

Technical data:

Voltage	: AC230V(AC110V / AC24V available)
Power consumption	: 2W
Setting range	: 5°C ~ 90°C
Limitation range	: 4°C ~ 99°C (factory setting: 28°C~32°C)
Switching differential	: ±0.5K
Ambient temperature	: -5 ~ 50°C
Protective housing	: IP20
Housing material	: anti-flammable PC
Floor sensor	: rubber-thermoplastic NTC sensor, cable length is 3m

Function:

"✋" manual mode
The scheduled event program is overridden, set the temperature according to your individual requirements an d the thermostat will operate at this temperature permanently

"◷" clock-controlled programme mode
The day has been split into 6 events, the thermostat will operate automatically according to the programmed temperature and time

"✋" &"◷" comfort mode
The temperature can be temporarily changed for a single event, the comfort mode temperature is reset at the next event, and the thermostat will return to the scheduled event program

- Wake-up, event 1
- Leave (am), event 2
- Return (am), event 3
- Leave (pm), event 4
- Return (pm), event 5
- Sleep, event 6
- Heating on
- "Key-lock" function is activated
- SEN Set sensor mode: built-in/floor/both sensors
- PRG Set vacation operating mode
- HI Max. limitation temperature setpoint
- LO Min. Limitation temperature setpoint
- ADA Early-start adaptive function
- ADJ Sensor calibration to ensure accurate temperature measurement
- Display with back light, stay on for 20 seconds
- LCD LCD display for better read out
- Display actual room temperature when switch-off
- Touch screen operating interface

"Key-lock" function

Press both the "▲" and "▼" keys for 5 secs to engage/disengage the "key-lock" function ("🔒" symbol appear means "key-lock" function is activated; disappear means "key-lock" function is deactivated)

Daily use of the thermostat

1) menu "📖"
Press the "📖" key to select manual mode or clock-controlled programme mode, use the "▲" or "▼" key to enter into comfort mode in clock-controlled programme mode

2) plus "▲" & minus "▼"
Press the "▲" or "▼" key to increase or decrease your set value

3) clock "◷"
Press the "◷" key to set the time and day
press the "◷" key till the day start blinking, use the "▲" or "▼" key to set the day, press the "◷" key to confirm the setting and the hours start blinking, use the "▲" or "▼" key to set the hours, press the "▲" or "▼" to confirm the setting and the minutes start blinking, use the "▲" or "▼" key to set the minutes, press the "◷" key to accept the settings

4) on/off "⏻"
Press the "⏻" key to switch on or switch off the thermostat
the setted temperature and the time will be displayed alternately, and the room temperature can be directly read out on the screen

Programming: 6-event time and temperature

Press the "📖" key for 5 seconds to start programming

Key	Event		Symbol	Time	▲ ▼	Temperature	▲ ▼
📖 ✋	Day 1-5	1	☼	06 : 00	Set the start/end time	20°C	Set programmed temperature
		2	⌂	08 : 00		15°C	
		3		11 : 30		15°C	
		4		12 : 30		15°C	
		5	⌂	17 : 00		22°C	
		6	☾	22 : 00		15°C	
	Day 6-7	1	☼	08 : 00		22°C	
		2	☾	23 : 00		15°C	

Note:
1) the pre-programmed setpoint (15°C) for event 3 & 4 is the same as event 2, please reset it according to you individual requirement
2) symbol "OFF" will be displayed if the setpoint reachs the minimum set value and the thermostat is switched off in this event

Advanced settings (qualified person preferred)

Press the "📖" key simultaneously switching on the thermostat to enter into the advanced setting mode(when the device is switched off)

Key	Symbol		Setting	▲ Or ▼
📖 ↕ ⏻ ✋	1	AD J	Temperature calibration	Adjust measured temperature
	2	SEN	Sensor mode	IN : built-in sensor OUT : floor sensor ALL : both sensor (floor sensor is the limit sensor)
	3	HI	Max. Temperature	Max. Limitation temperature setpoint (99°C)
	4	LO	Min. Temperature	Min. Limitation temperature setpoint (4°C)
	5	ADA	Adaptive function	ON : preheating 30minutes early OFF: cancel adaptive function
	6	PRG	Set vacation mode	2 : 5/2 day mode 1 : 6/1 day mode 0 : 7 day mode
	7	FAC	Reset to factory settings	Programming parameters will be reset to factory settings when symbol "- - -" appears

Sensor failure:

Please select the right sensor mode when operation, it will display the "Err" symbol on screen for sensor failure, thermostat must be checked till the fault is eliminated

Explanation of symbols

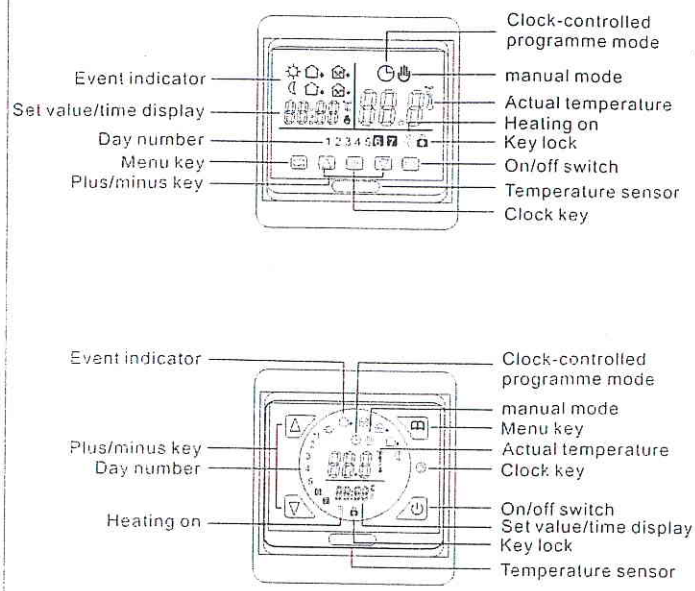

Dimension

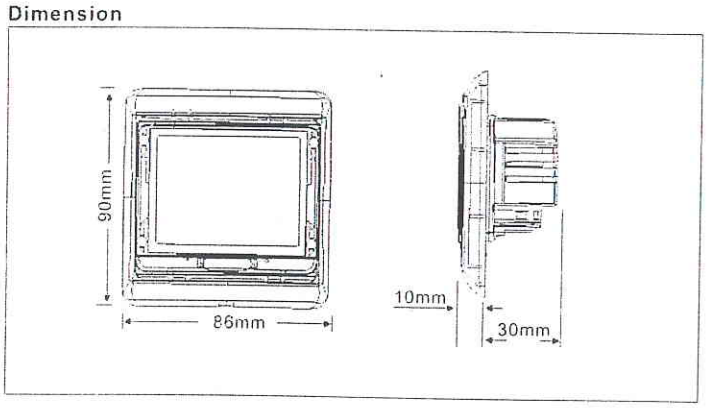

Mounting steps:

1

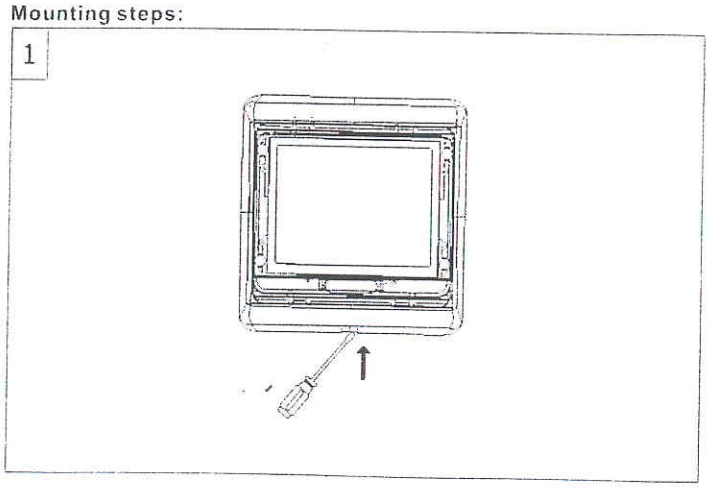

2

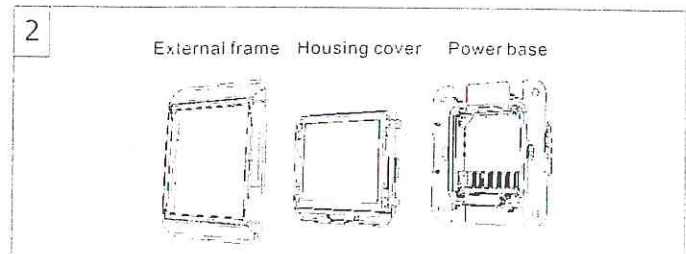

NOTE: please take care of the connection wires between the housing cover and the power base when install the thermostat

3

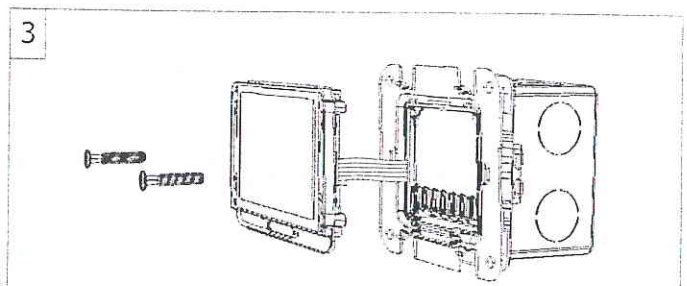

Install the thermostat in electrical connection box with screws

4

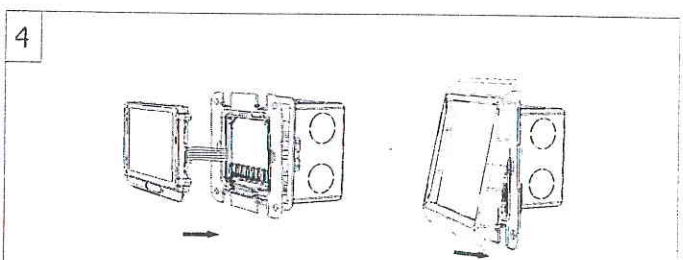

Install the housing cover and lock the external frame
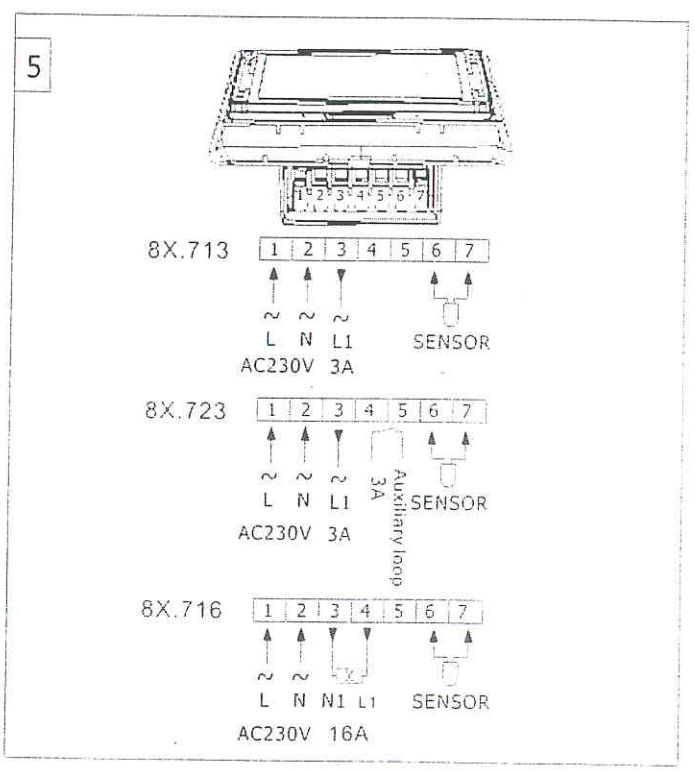
5