The Pyronix
Octopus Range
Passive Infrared Receivers

As part of our continued development program specifications may change.
OCTOPUS is e a trade mark of Pyronix Ltd.

The Octopus is available in EP and Super versions and both are compatible with conventional alarm systems.

The Octopus range of Passive Infrared Receivers provide 360 degree detection. The detector works by constantly monitoring the Infrared energy levels around a room and recognising a change caused by the entry of an intruder. The detector will then inform the panel which will initiate the alarm condition.

The range consists of two detectors both sleek and discreet in appearance and fit neatly onto any interior.

The Octopus range of ceiling mounted detectors offers many advantages over wall mounted detectors :

- **Provides 360 degree coverage.**
- **Ceiling Mount provides ideal coverage for obscured areas and is less likely to obscured by furniture, office partitions etc.**
- **3D lens gives optimum coverage.**
- **Pyronix have developed a system known as IFT for filtering out interference caused by external electrical sources.**
- **Sealed Optics ensure against false alarms caused by insects which may interfere with the sensor inside the detector.**
- **Analogue and Digital Pulse Count options allow your installer to adjust the sensitivity to suit the environment.**
- **A robust 3mm thick case protects the components inside the detector.**
- **Interlocking Quad Element sensor provides a greater level of stability and higher rate of detection than a standard Quad sensor.**
- **Octopus Lens Coverage - The Octopus range of detectors provide 360 degree coverage.**

The Pyronix

Octopus Range

Passive Infrared Receivers

Manufactured in the U.K.

OCTOPUS EP

360° Ceiling Mount Detector.
Temperature Compensation Option.
Interlocking Quad Element Pyroelectric
Sensor for domestic or commercial use.
3D lens for optimum coverage pattern.
Unique Independent Floating Thresholds. (IFT)
Analogue pulse count 1, 2 or 3.
Twin LED's to facilitate walk test.
RFI immunity to meet EN50130-4.
Screw fixing front cover.
Robust 3 mm case thickness.
Colour : white.
5 Year Manufacturers Warranty.

OCTOPUS SUPER

360° Ceiling Mount Detector.
Temperature Compensation Option.
Digital Signal Processing
Interlocking Quad Element Pyroelectric Sensor for
domestic or commercial use.
3D lens for optimum coverage pattern.
Unique Independent Floating Thresholds. (IFT).
Option of Dual Edge Triggering or Sequential Pattern Processor (SPP).
Latch Memory (C+).
First to Alarm Memory (FTA).
Remote LED enable (E-).
Background Disturbance Indicator (BDI)
RFI immunity to meet EN50130-4.
Screw fixing front cover.
Robust 3 mm case thickness.
Colour : white.
5 Year Manufacturers Warranty.

DIMENSIONS

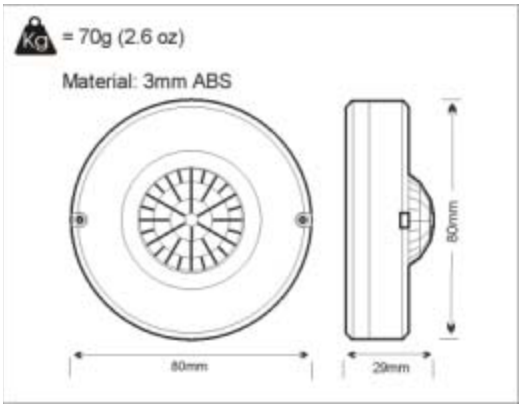

INTERLOCKI NG QUAD ELEMENT COVERAGE PATTERN

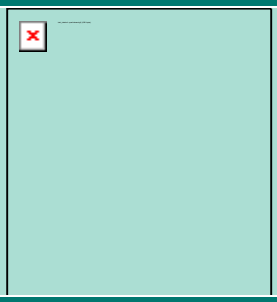

To achieve optimum coverage and security a detector needs to be sensitive to movement throughout its 360 degree field of view. This is achieved by using a special Pyro-electric sensor with interlocking elements. The elements are positioned so that an intruder walking in any direction through the detector's field of view will directly cross a positive or negative zone.

LENS COVERAGE

COVERAGE PATTERN PLAN VIEW

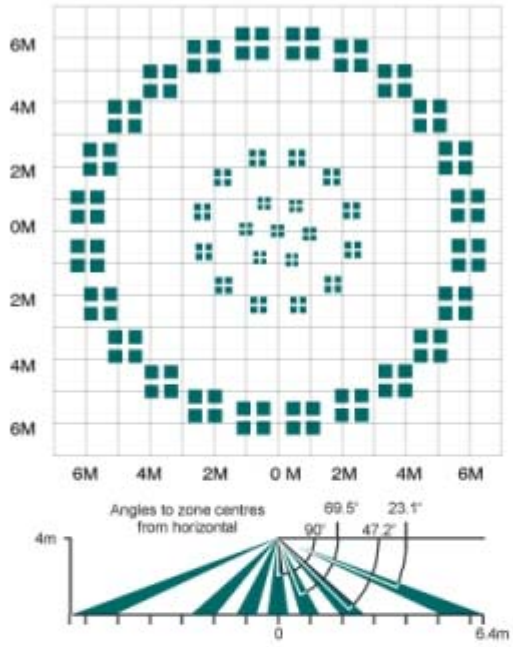

TRUE COVERAGE FROM SIDE VIEW

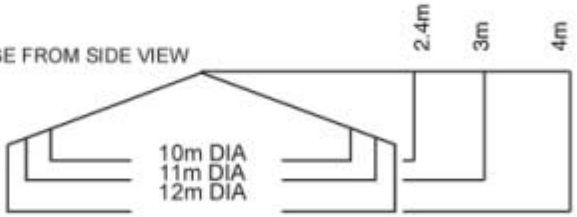
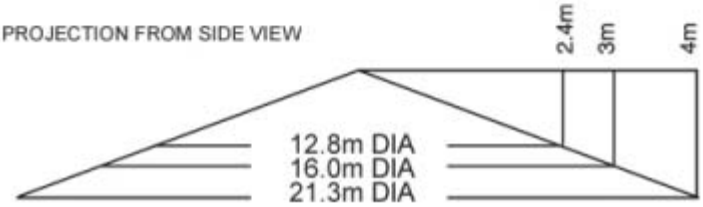
PROJECTION FROM SIDE VIEW