ELLIPSE and KH2 Product Guide

Electronic Time Lag Switches

Overview

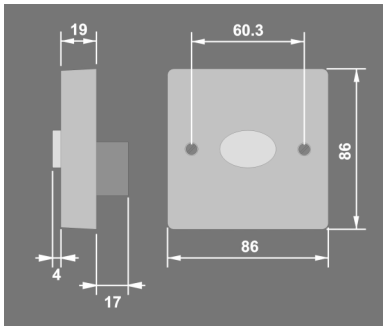

ELLIPSE
Push button activated time lag switch

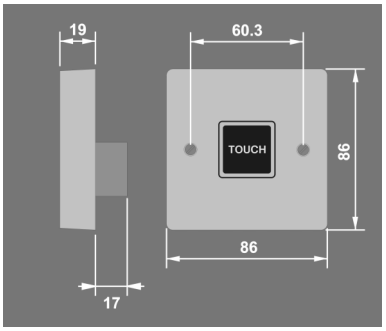

KH2
Touch activated time lag switch

The ELLIPSE and KH2 time lag switches are a quick and effective way to reduce energy consumption for lighting applications. Pressing the button or touch pad brings the lights on; the lights will then switch off automatically after a preset time period has elapsed.

These units do not require a neutral connection, therefore they can be used to replace an existing light switch. The duration of the time delay is set by a thumbwheel on the reverse of the unit.

The ELLIPSE/TN and KH2N have neon illumination to allow the unit to be located in the dark.

Time lag switches can be used in two way and intermediate switching arrangements without any extra wiring.

Wiring

Conventional Wiring

Wire the units as in diagram 1. When using multiple switch positions see diagram 2.

For two way and intermediate switching follow the diagrams overleaf. Note that as long as each switch position has a *Live* feed and a *Live Out* connection to the load then the switch will be properly wired.

Installation

***Warning**. This device works at mains potential. Be sure to take care when working with electricity.*

1. Make sure the load is connected and in working order.
2. Isolate the mains supply to the circuit at the main consumer unit.
3. Connect the controller via the terminal block. Live supply to the *L* terminal and the load to the *LIVE OUT* terminal.
4. Push the override switch to the off position (see diagram).
5. Set the timing range using the thumbwheel. Turn clockwise to increase timing.
6. Screw the unit to the wall and switch the mains supply back on at the distribution board.
7. **Wait 20 seconds before pushing the button**
8. Push the button or touch pad and the lights will come on
9. Wait for the time period and the lights will turn off again.

Diagram 1
Conventional wiring

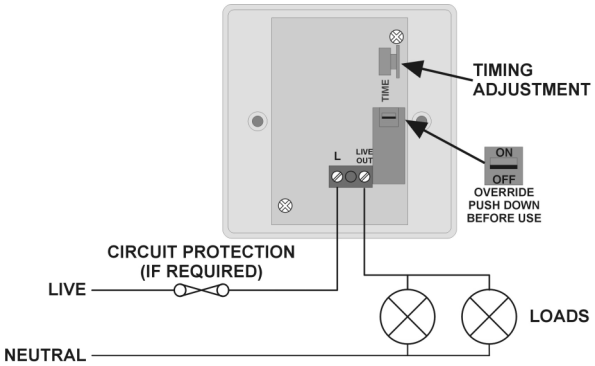

Diagram 2
Multiple switch locations

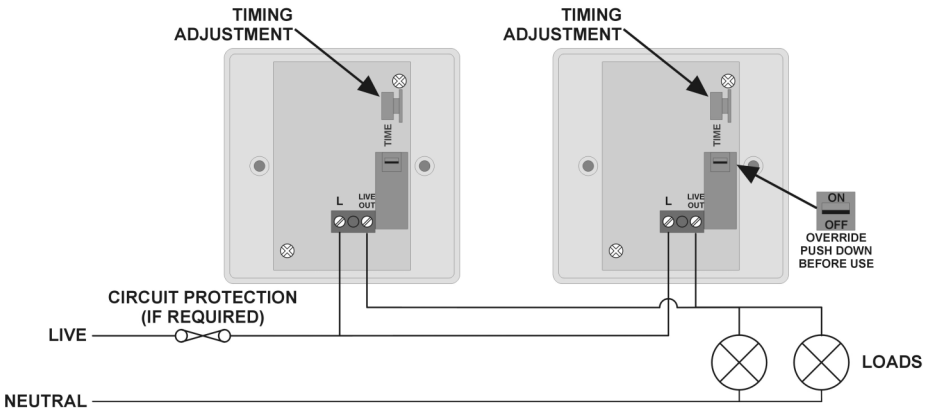

Fault Finding

LIGHTS DO NOT COME ON

Check to see if the live supply to the circuit is good. Strap across the *L* and *LIVE OUT* terminal to turn the load on.

LIGHTS DO NOT GO OFF

Ensure that you have waited for the time out period.

If the lights still do not go off then it is likely the unit was not given the 20 seconds start up period on installation. Follow this procedure:

1. Isolate the mains supply to the circuit at the main consumer unit and unscrew the unit from the wall.
2. Push the override switch to the off position.
3. Reapply the mains and wait for 20 seconds.
4. Activate timer as normal.

LIGHTS FLICKER

Ensure that there are sufficient power factor correction capacitors fitted.

Specification

LOAD

10A of lighting including incandescent, fluorescent, compact fluorescent, low voltage (switch primary of transformer).

Fluorescent and compact fluorescent fittings with “switch start” ballasts - 10 ballasts maximum. Power factor correction capacitors must be fitted.

Most fluorescent fittings have power factor correction capacitors fitted. If they are not present the unit may fail to turn off properly or flicker. In this case fit one capacitor per circuit with a minimum value of 1µF for every unit installed. The capacitor should be fitted across switched live and neutral. Note that it is not necessary to fit a capacitor on every fitting. This also applies to fittings controlled with high frequency ballasts and maintained emergency fittings.

Not suitable for switching contactors
Not suitable for SON lighting
Not suitable for heating or ventilation loads.
Please contact our sales department for a suitable alternative product.

SUPPLY VOLTAGE	220-240 Volts AC 50 Hz
TIME OUT PERIOD	20 seconds to 20 minutes (approximate)
FIXING METHOD	Surface fixing 25mm deep plastic surface mount moulded box. Flush fixing 25mm steel wall box or 32mm deep cavity wall box.
TERMINAL CAPACITY	1.5mm^2
MATERIAL	Flame retardant ABS
TYPE	Class 2
TEMPERATURE	-10°C to 35°C
CONFORMITY	EMC-2004/108/EC LVD-2006/95/EC

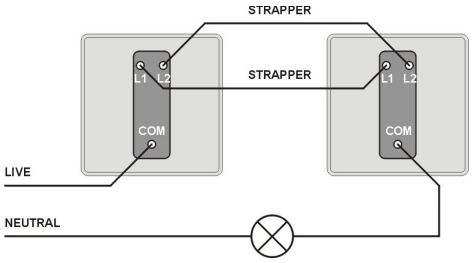

WIRING DIAGRAM FOR TWO WAY SWITCHING

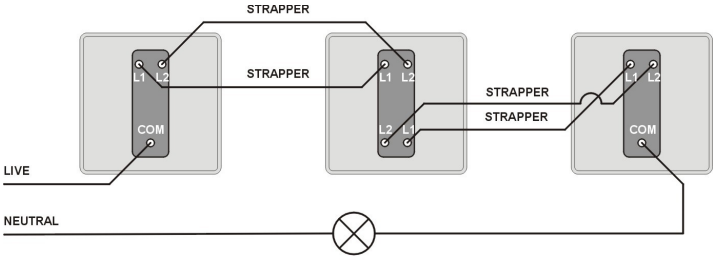

WIRING DIAGRAM FOR TWO WAY AND INTERMEDIATE SWITCHING

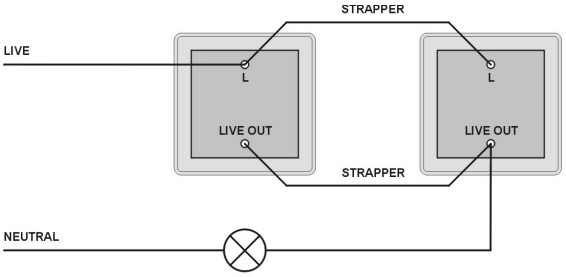

WIRING DIAGRAM FOR TWO WAY SWITCHING USING TIME LAG SWITCHES

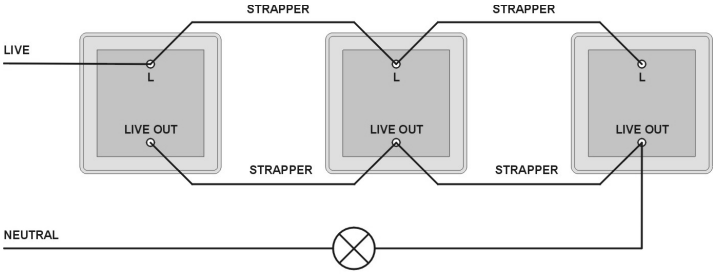

WIRING DIAGRAM FOR INTERMEDIATE AND TWO WAY SWITCHING USING TIME LAG SWITCHES

Part Numbers

ELLIPSE	Electronic time lag switch push button activated
KH2	Electronic time lag switch touch activated
ELLIPSE/TN	Electronic time lag switch push button activated with neon
KH2N	Electronic time lag switch touch activated with neon

IMPORTANT NOTICE!
This device should be installed by a qualified electrician in accordance with the latest edition of the IEE Wiring Regulations and any applicable Building Regulations.

FM 45789 EMS 534520

energy services and technology association

C.P. Electronics Ltd
Brent Crescent
London
NW10 7XR
United Kingdom
Tel: + 44 (0) 333 900 0671
Fax: + 44 (0) 333 900 0674
www.green-iswitches.co.uk
enquiry@green-iswitches.co.uk

Due to our policy of continual product improvement CP Electronics reserves the right to alter the specification of this product without prior notice.